VACUTEC Meßtechnik GmbH
Dornblüthstraße 14
01277 Dresden
Germany
Tel.: +49 (0)351 317 24 - 0
Fax: +49 (0)351 310 50 85
E-Mail: info@vacutec-gmbh.de
Web: www.vacutec-gmbh.de

Geiger-Mueller Tube

Type 70 003 A

Order No. 003 00 15

Application

The counter tube 70 003 A is an energy compensated halogen quenched Geiger-Mueller counter tube for measuring X-ray and γ-ray dose rates. This counter tube includes a correction filter that has been designed for measuring the Ambient Dose Equivalent H*(10) (in Sv/h) with a flat response within a broad photon energy range for the counter tube being uniformly irradiated. The actual dose rate sensitivity is known for photon energies up to about 10 MeV. Within the combined range of energy from 30 keV to 2 MeV and radiation angles within ±45°, the maximum variation of the response is -29% to +67%, if compared to the ^{137}Cs reference radiation in the calibration direction of 0^0. The counter tube is recommended for measurements of dose rates from 1 μSv/h to 35 mSv/h.

Construction Type

Glass tube, protecting sleeve made of heat-shrinking boot, with solderable connecting wires.

Mechanical Data

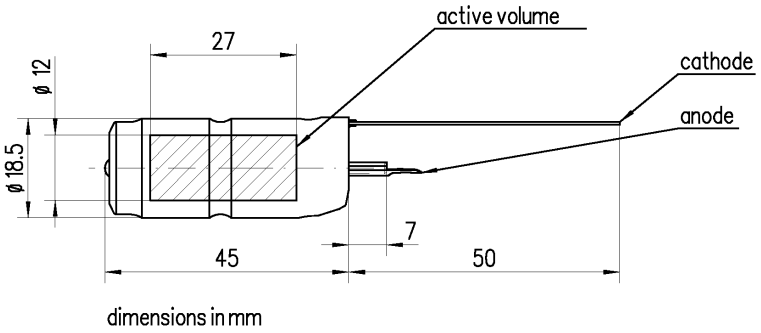

Measurement Circuit

The given data were measured by counting the pulses derived from the anode signal via the circuit R1, R2, C1 (R1 = 65 kOhm, C1= 50 pF). The pulse height trigger level for the pulse counting is 2% of the pulse amplitude after the recovery time.

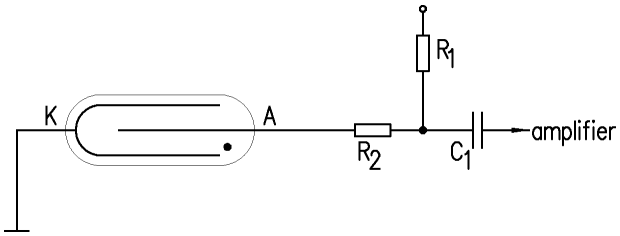

We reserve the right to alter the specifications

VACUTEC Meßtechnik GmbH
Dornblüthstraße 14
01277 Dresden
Germany
Tel.: +49 (0)351 317 24 - 0
Fax: +49 (0)351 310 50 85
E-Mail: info@vacutec-gmbh.de
Web: www.vacutec-gmbh.de

Type 70 003 A

Order No. 003 00 15

Technical Data

(All data refer to the recommended operation conditions.)

Physical data

Dose rate sensitivity (662keV, ^{137}Cs)	1.6	(counts/s) / (µSv/h)
Dose rate range (662keV, ^{137}Cs)	(1 ... $3.5 \cdot 10^4$)	µSv/h
Photon energy range	> 30	keV
Background (shielded by 5 cm Pb with a 2 mm Al surface)	≤ 8	counts/min
Length of the sensitive gas volume	27	mm
Anode diameter	2.0	mm
Mass	19	g
Filling gas	Neon/Halogen	
Life expectancy	> $6 \cdot 10^{10}$	counts

Electrical data

Starting voltage	< 350	V
Plateau voltage range	(400 ... 600)	V
Plateau length	> 200	V
Plateau slope	< 0.08	%/V
Recommended supply voltage	500	V
Recommended anode resistor R_2	6.8	MΩ
Dead time (R_2 = 6.8 MΩ)	≤ 80	µs
Anode to cathode capacitance	≤ 1.7	pF

Limiting values

Storage temperature range	(–55 ... +70)	°C
Operating temperature range	(–40 ... +70)	°C

We reserve the right to alter the specifications

VACUTEC Meßtechnik GmbH
Dornblüthstraße 14
01277 Dresden
Germany
Tel.: +49 (0)351 317 24 - 0
Fax: +49 (0)351 310 50 85
E-Mail: info@vacutec-gmbh.de
Web: www.vacutec-gmbh.de

Type 70 003 A

Order No. 003 00 15

Pulse rate vs. dose rate (for ^{137}Cs)

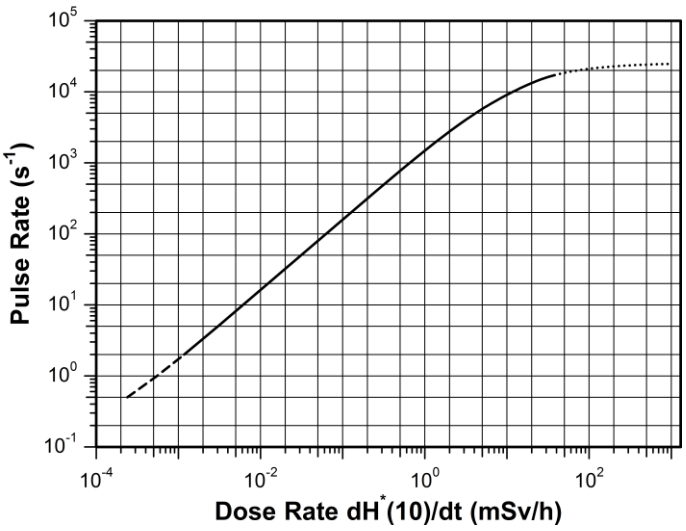

Relative energy dependence of the response (to ^{137}Cs)

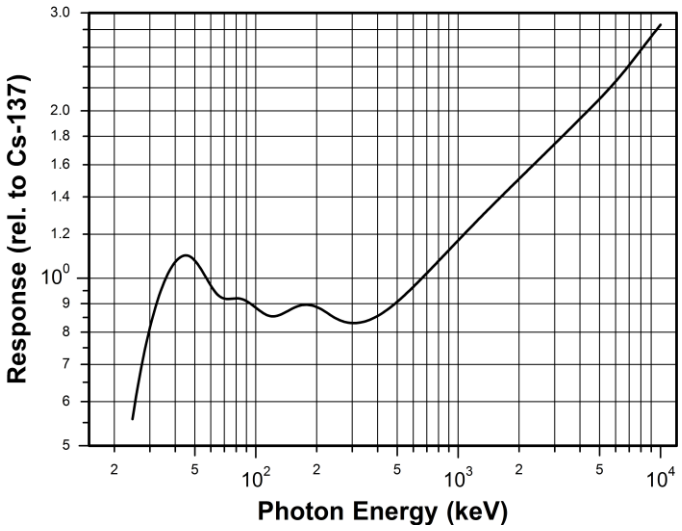

The pulse rate vs. dose rate was measured with 662 keV γ-ray from Cs-137. The energy dependence of the response was determined with filtered X-rays of the narrow series as defined in ISO 4037 from 25 keV to 248 keV and with the 662 keV, 1250 keV, 4.4 MeV, and 6…7 MeV γ-rays from Cs-137, Co-60, and from the C-12(p, p' γ) and F-19(p, α γ) reactions.

We reserve the right to alter the specifications

VACUTEC Meßtechnik GmbH
Dornblüthstraße 14
01277 Dresden
Germany
Tel.: +49 (0)351 317 24 - 0
Fax: +49 (0)351 310 50 85
E-Mail: info@vacutec-gmbh.de
Web: www.vacutec-gmbh.de

Type 70 003 A

Order No. 003 00 15

Angular dependence of the response (relative to ^{137}Cs at 0^0)

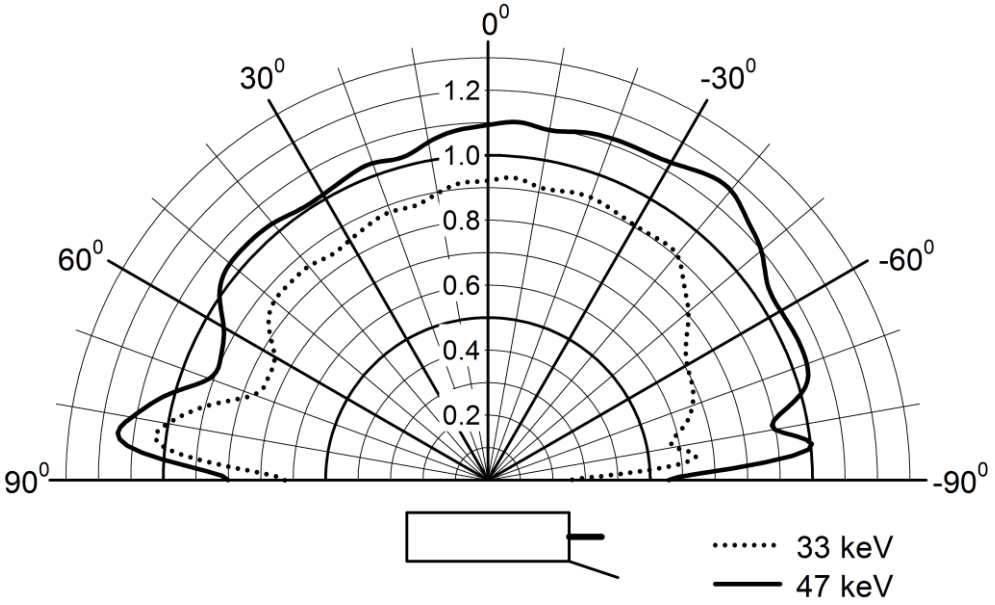

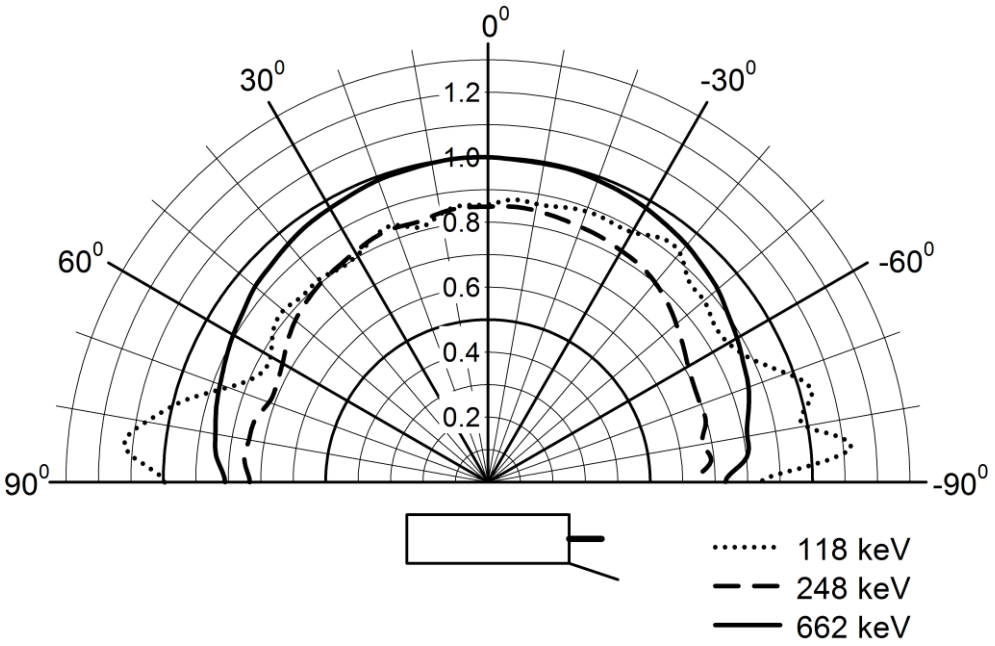

We reserve the right to alter the specifications